清源泵业
QINGYUANBENGYE

QW series of submersible sewage pump

QW 系列潜水排污泵

● About the Products 产品简介

QW series submersible sewage pump is based on the advanced technology of domestic and foreign similar products. We have many years of experience in design and manufacture. After several rounds of technical innovation,it has become more functionally reliable and sophisticated. Its design has been streamlined with chart playing and it has advantages such as high efficiency.winding protection,no clogging,high reliability,automatic coupling,automatic control and automatic protection. It is versatile and has a large working scope.

The pump and the motor are sharing the same shafts to form a compact structure. So it is easy to maintain. Upon customer's request,various submersible sewage pumps are available to meet the requirements.

QW 系列潜水排污泵是在消化吸收国内外同类产品先进技术的基础上研制而成。本公司具有多年的设计、制造经验，结果多次技术创新，产品性能已更可靠、更成熟。该产品设计型谱化，具有效率高、防缠绕、无堵塞、高可靠性、自动耦合、自动控制和自动保护等优点。泵的性能覆盖面广。泵玉电机共轴，结构紧凑，便于维修，可安客户要求定制。

● Main uses and conditions of application 用途及特点

QW series submersible sewage pump is mainly used in municipal engineering ,industry & agriculture, hospitals, buildings,hotels and restaurant to transport waste water,urban sewage and rainwater,which contains solid particles and filaments,as well as in raw water supply,aquaculture and irrigation(with special material,it can be used with a corrosive medium). It is fitted with self protected devices and control cabinet and can control the water level according to customers' requirements.

Operating Conditions

1. The temperature of transported medium should not be more than +40℃;
2. The PH value of the medium should be 4~10;
3. The volume ratio of solids in the transported medium should be under 2%;
4. Diving depth: 20m at the most;

QW 系列潜水排污泵主要适用于市政工程、工农业、医院、建筑、宾馆、饭店的等行业，用于熟食品能够带固体颗粒及长纤维的废水、城市污水和雨水，还包括原水的输送、水产养殖、灌溉等（配以特种材质，可用于有一定腐蚀介质的场所），可根据客户要求进行水位控制，并配有自动保护装置和控制柜。

使用条件：

1. 输送介质温度≤+40℃；
2. 输送介质 PH 值 4~10；
3. 输送介质中的固体的容积比在 2%以下；
4. 潜水深度最深 20m

● Product parameters 产品参数

Outlet Range: 50~600mm
Flow Range: 7~6000m³ /h
Head Range: 5~60m
Voltage Range: 380V~10KV
Power Range: 0.75KW~450KW

本公司潜水轴流泵名义出水口径为 50~600mm。流量范围 7~6000m³ /h。扬程范围 5~60m。
功率范围 0.75KW 到 450KW，电压等级 380V 到 10KV。






Jiangsu Qingyuan Pump Industry Co.,Ltd. / Taixing Tuohai Trading Co.,Ltd.
Add: Nianfang RD,Industrial park,Taixing City,Jiangsu Provice,China
WEB: www.jsqypump.com
jsqypump.en.alibaba.com
Skype: jason_zhj1985 ● **Whatsapp**: +86-18061007135 ● **Wechat**:+86-15094327135 ● **Email**: jason_zhj1985@hotmail.com

清源泵业
QINGYUANBENGYE

QZ series of submersible axial flow pump

QZ/QH 系列潜水轴/混流泵

● About the Products 产品简介

QZ/QH series submersible axial flow pump and QH series submersible mixed flow pump are designed for places requiring large flow rate and low head. Generally, the submersible axial flow pump is used for the head under 10 m，the submersible mixed flow pump for the head under 20m.This product is an excellent replacement to the traditional axial flow pump and mixed flow pump. The motor is seamlessly integrated with the water pump and operates under water. It has a series of advantages, which are unrivaled by traditional units.

QZ/QH 系列潜水轴流泵/潜水混流泵是为大流量，低扬程设计的。潜水轴流泵使用扬程在 10 米以下，潜水混流泵使用扬程在 20 米以内。本产品是传统轴流泵，混流泵的最佳换代产品，电机与水泵构成一体，潜入水中运行，具有传统机组无法比拟的一系列优点。

● Main uses and conditions of application 用途及特点

These pumps are used in agriculture to irrigate and drain water, in municipal works to drain rainwater and slightly polluted water, in industries to supply process water, cooling water and raw water, and in irrigation works to divert water. They are suitable to transport clean water or slightly polluted water.

Feature

1. The motor and the water pump are an integral part. There is no need to perform the complicated axial alignment, which costs time and work. So it is very simple and easy to install.No space reserve is needed for the standby pump. By storing the standby pump into the storehouse, investment can be saved. Because the motor operates under the water, the civil works and the building for the pump station can be greatly reduced.With reduced installation area,30 - 40% of the total price for the pump station can be saved.The pump operates under the water and the water flows around the motor. So low noises and good cooling conditions have been achieved.
2. The pump station can also be constructed under ground,thus preserving the landscape above the earth.
3. Using the submersible electric pump is the thorough solution to solve the challenge of pump station construction and flood prevention at rivers and lakes,where the water level has a large fluctuation. In this way,the long shaft has been saved between the motor and the pump,and the safety and reliability improved.

在农业中，用于灌溉；在市政中用于排雨水、轻度污水；在工业中用于工艺用水、冷却水及原水供应；在水利中用于调水工程。适用于输送清水或轻度污水。

特点

1) 由于电机与水泵构成一体，现场无需复杂的轴线对中装配程序，安装方便快捷，因此可不预备用泵机位，将备用泵存于库房，节省泵站进水池的投资。水泵潜入水中运行，可大大简化泵站土建及建筑结构工程，减少安装面积，节约泵站总造价的 30%~40%。
2) 泵在水中运行，水流从电机周围流过，噪声低，电机冷却条件好。可建为地下泵站，保持地面环境风貌。
3) 采用潜水电泵，是解决在水位涨落大的沿江，湖泊地区建泵站和防洪问题最彻底的方法，省去了机泵间的长轴，提高了运行安全可靠性。

● Product parameters 产品参数

The normal water outlet of our submersible axial/mixed flow pump are 350,500,600,700,800,900,1000,1200,1400mm.
The flow rate is 0.1m³ /s to 4m³ /s. The range of lift is 2-16m.
The power range is from 7.5KW to 650KW and the voltage grade are 380V to 10KV.
本公司潜水轴流泵名义出水口径有 350,500,600,700,800,900,1000,1200,1400mm。流量范围 0.1~4m³ /s。扬程范围 2~16m。
功率范围 7.5KW 到 650KW，电压等级 380V 到 10KV。







Jiangsu Qingyuan Pump Industry Co.,Ltd. / Taixing Tuohai Trading Co.,Ltd.
Add: Nianfang RD,Industrial park,Taixing City,Jiangsu Provice,China
WEB: www.jsqypump.com
jsqypump.en.alibaba.com
Skype: jason_zhj1985 ● **Whatsapp**: +86-18061007135 ● **Wechat**:+86-15094327135 ● **Email**: jason_zhj1985@hotmail.com

清源泵业
QINGYUANBENGYE

QJB series of submersible mixer

QJB 系列潜水搅拌机

● About the Products 产品简介

The QJB submersible mixer is divided into a hybrid type and a low speed push type. The mixing mixer is suitable for liquids containing suspended solids in sewage treatment plants and industrial processes; the low-speed push-flow mixer is suitable for industrial and municipal sewage treatment plant aeration tanks and anaerobic tanks, which generate strong water flow and can be used for water circulation in the pool. The nitrification, nitrogen removal and phosphorus removal stages create a water stream.

QJB 型潜水搅拌机分为混合型和低速推流型。混合型搅拌机适用于污水处理厂和工业流程中含有悬浮物的液体；低速推流型搅拌机适用于工业和城市污水处理厂曝气池和厌氧池，其产生低切向流的强力水流，可用于池中水循环及硝化、脱氮和除磷阶段创建水流等。

● Features 产品特点

1. Compact structure, easy installation and maintenance, long service life.
2. The impeller has the best hydraulic performance and high efficiency. The swept blade has self-cleaning function and anti-winding.
3. When used in combination with aeration equipment, energy consumption can be greatly reduced, oxygenation can be significantly improved, and precipitation can be effectively prevented.
4. The impeller is made of stainless steel or composite material (polyurethane, reinforced glass steel), corrosion resistant.

特点

4) 结构紧凑、安装检修方便、使用寿命长；
5) 叶轮具有最佳水力性能、效率高，后掠式叶片具有自洁功能，防缠绕；
6) 与曝气设备混合使用，可使能耗大幅度降低，充氧量明显提高，有效防止沉淀；
7) 叶轮采用不锈钢或复合材料（聚氨酯、增强玻璃钢），耐腐蚀。

● Conditions of Use 工作环境

- ✓ Medium temperature:T≤40℃
- ✓ Medium density: ρ ≤1150kg/m³
- ✓ Media pH:6~9

- ✓ 介质温度：T≤40℃
- ✓ 介质密度： ρ ≤1150kg/m³
- ✓ 介质 PH 值：6~9



Jiangsu Qingyuan Pump Industry Co.,Ltd. / Taixing Tuohai Trading Co.,Ltd.
Add: Nianfang RD,Industrial park,Taixing City,Jiangsu Provice,China
WEB: www.jsqypump.com
jsqypump.en.alibaba.com
Skype: jason_zhj1985 ● **Whatsapp**: +86-18061007135 ● **Wechat**:+86-15094327135 ● **Email**: jason_zhj1985@hotmail.com

清源泵业
QINGYUANBENGYE

FS series of Grinder

FS 粉碎型格栅除污机

● About the Products 产品简介

Our company's grinder pulverizes the suspended and floating dirt in the sewage into fine particles. The pulverized dirt does not need to be salvaged and flows directly along with the sewage. All equipments are installed in the underground water pool, and the top of the pool is closed and greened, which solves the shortcomings of traditional equipment, such as high noise, high construction cost and high operating cost.

我们公司粉碎型格栅把污水中的悬浮和漂浮污物粉碎成细小颗粒，粉碎后的污物无需打捞，直接随污水流走。所有设备全部安装在地下水池内，水池顶部封闭，绿化，解决了传统设备噪音大，建设成本高，运行费用高等缺点。

● Features of products 产品特点

(1) The grinder can adopt outdoor type motor or submersible motor.
(2) Particularly suitable for the construction of buried pumping stations to beautify the pumping station environment.
(3) The garbage in the sewage is crushed into 6mm~10mm tiny particles, which flow with the water.
(4) No need conveyor equipment, press equipment.
(5) Does not cause secondary pollution to the surrounding environment.

1. 粉碎型格栅除污机可采用户外型电机或潜水电机；
2. 特别适宜建设地埋式泵站，美化泵站环境；
3. 污水中的垃圾经粉碎成 6mm~10mm 微小颗粒，随水流流走；
4. 无需输送设备、压榨设备；
5. 不对周边环境造成二次污染。

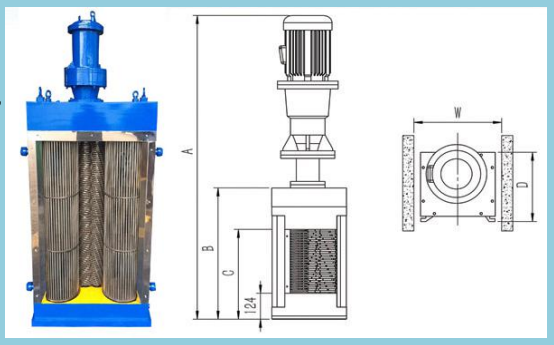

● Product parameters 产品参数

Model	A(mm)	B(mm)	C(mm)	D(mm)	W(mm)	Flow(m³/h)
FS(W)500	1260	827	635	250	600	110
FS(W)600	1360	927	735	250	600	160
FS(W)800	1560	1127	935	250	600	160
FS(D)500*300	1260	827	635	400	800	540
FS(D)700*300	1460	1027	835	400	800	756
FS(D)1000*300	1760	1327	1135	400	800	1180
FS(S)800*300	1535	1250	920	400	1500	2160
FS(S)1000*300	1735	1450	1120	400	1500	2780
FS(S)1200*300	1935	1650	1320	400	1500	3460
FS(S)1500*300	2135	1950	1620	400	1500	4270
FS(S)1000*600	2080	1568	1240	720	2000	5640
FS(S)1500*600	2580	2068	1740	720	2000	6980
FS(S)1800*600	2880	2368	2040	720	2000	8340









Jiangsu Qingyuan Pump Industry Co.,Ltd. / Taixing Tuohai Trading Co.,Ltd.
Add: Nianfang RD,Industrial park,Taixing City,Jiangsu Provice,China
WEB: www.jsqypump.com
jsqypump.en.alibaba.com
Skype: jason_zhj1985 ● **Whatsapp**: +86-18061007135 ● **Wechat**:+86-15094327135 ● **Email**: jason_zhj1985@hotmail.com